Protecting Your Property From Flooding

ARE YOU AT RISK?

If you aren't sure whether your house is at risk from flooding, check with your local floodplain manager, building official, city engineer, or planning and zoning administrator. They can tell you whether you are in a flood hazard area. Also, they usually can tell you how to protect yourself and your house and property from flooding.

WHAT YOU CAN DO

Flood protection can involve a variety of changes to your house and property – changes that can vary in complexity and cost. You may be able to make some types of changes yourself; however, complicated or large-scale changes and those that affect the structure of your house or its electrical wiring and plumbing should be carried out only by a professional contractor licensed to work in your state, county, or city. One example of flood protection is adding a waterproof veneer to the exterior walls of your house. This is something that only a licensed contractor should do.

ADD WATERPROOF VENEER TO EXTERIOR WALLS

Even in areas where flood waters are less than 2 feet deep, a house can be severely damaged if water reaches the interior. The damage to walls and floors can be expensive to repair, and the house may be uninhabitable while repairs are underway.

One way to protect a house from shallow flooding is to add a waterproof veneer to the exterior walls and seal all openings, including doors, to prevent the entry of water. As shown in the figure, the veneer can consist of a layer of brick backed by a waterproof membrane. Before the veneer is applied, the siding is removed and replaced with exterior grade plywood sheathing. If necessary, the existing foundation footing is extended to support the brick. Also, because the wall will be exposed to flood water, changes are made to the interior walls as well so that they will resist moisture damage. In the area below the flood level, standard batt insulation is replaced with washable closed-cell foam insulation, and any wood blocking added inside the wall cavity is made of exterior grade lumber.

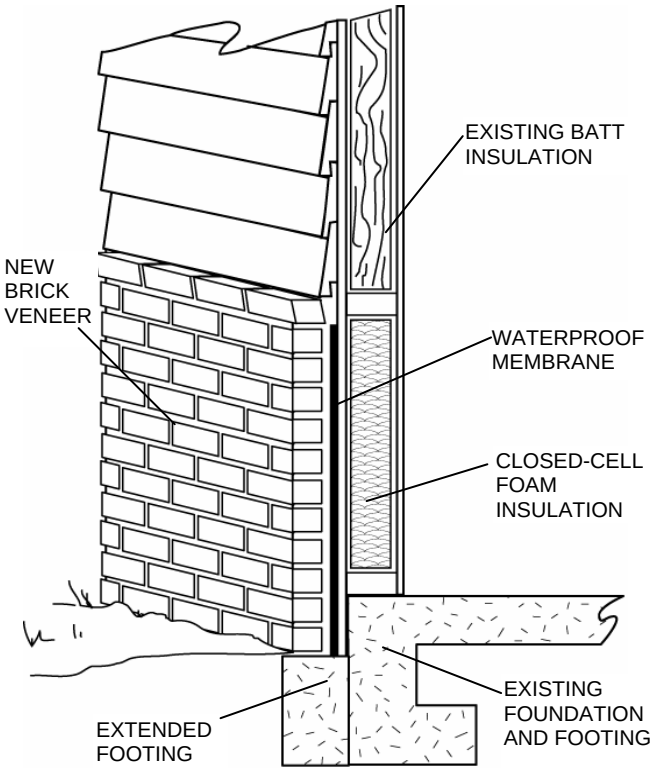

Add Waterproof Veneer to Exterior Walls

TIPS

Keep these points in mind if you plan to have a waterproof veneer added to the exterior walls of your house:

- ✓ Adding a waterproof veneer is appropriate in areas where the flood depth is less than 2 feet. When flood depths exceed 2 feet, the pressure on waterproofed walls increases greatly, usually beyond the strength of the walls. If greater flood depths are expected, consult with a licensed civil or structural engineer before using this method.
- ✓ Changes to the foundation of your house must be done by a licensed contractor, who will ensure that the work is done correctly and according to all applicable codes. This is important for your safety.
- ✓ If your house is being remodeled or repaired, consider having the veneer added as part of the remodeling or repair work. It will probably be cheaper to combine these projects than to carry them out separately.
- ✓ If your house has brick walls, you can still use this method. The new brick veneer and waterproof membrane are added over the existing brick.
- ✓ If your house is flooded by groundwater entering through the floor, this method will not be effective.

ESTIMATED COST

If you have a contractor add a waterproof brick veneer to your house, you can expect to pay about $10 per square foot of exterior wall. For example, a 3-foot-high brick veneer on a house measuring 60 feet by 30 feet would cover about 540 square feet and would cost about $5,400. This figure does not include the cost of sealing doors and other openings or extending the foundation.

OTHER SOURCES OF INFORMATION

Protecting Your Home from Flooding, FEMA, 1994

Repairing Your Flooded Home, FEMA-234, 1992

Flood Emergency and Residential Repair Handbook, FIA-13, 1986

Retrofitting Flood-Prone Residential Structures, FEMA-114, 1986

To obtain copies of these and other FEMA documents, call FEMA Publications at 1-800-480-2520. Information is also available on the World Wide Web at **http//:www.fema.gov.**

Protecting Your Property From Flooding

Are You at Risk?

If you aren't sure whether your house is at risk from flooding, check with your local floodplain manager, building official, city engineer, or planning and zoning administrator. They can tell you whether you are in a flood hazard area. Also, they usually can tell you how to protect yourself and your house and property from flooding.

What You Can Do

Flood protection can involve a variety of changes to your house and property – changes that can vary in complexity and cost. You may be able to make some types of changes yourself; however, complicated or large-scale changes and those that affect the structure of your house or its electrical wiring and plumbing should be carried out only by a professional contractor licensed to work in your state, county, or city. One example of flood protection is raising the components of your electrical system above the level of the 100-year flood. This is something that only a licensed contractor should do.

Raise Electrical System Components

Electrical system components, including service panels (fuse and circuit breaker boxes), meters, switches, and outlets, are easily damaged by flood water. If they are inundated for even short periods, they will probably have to be replaced. Another serious problem is the potential for fires caused by short circuits in flooded systems. Raising electrical system components helps you avoid those problems. Also, having an undamaged, operating electrical system after a flood will help you clean up, make repairs, and return to your home with fewer delays.

As shown in the figure, all components of the electrical system, including the wiring, should be raised at least 1 foot above the 100-year flood level. In an existing house, this work will require the removal of some interior wall sheathing (drywall, for example). If you are repairing a flood-damaged house or building a new house, elevating the electrical system will be easier.

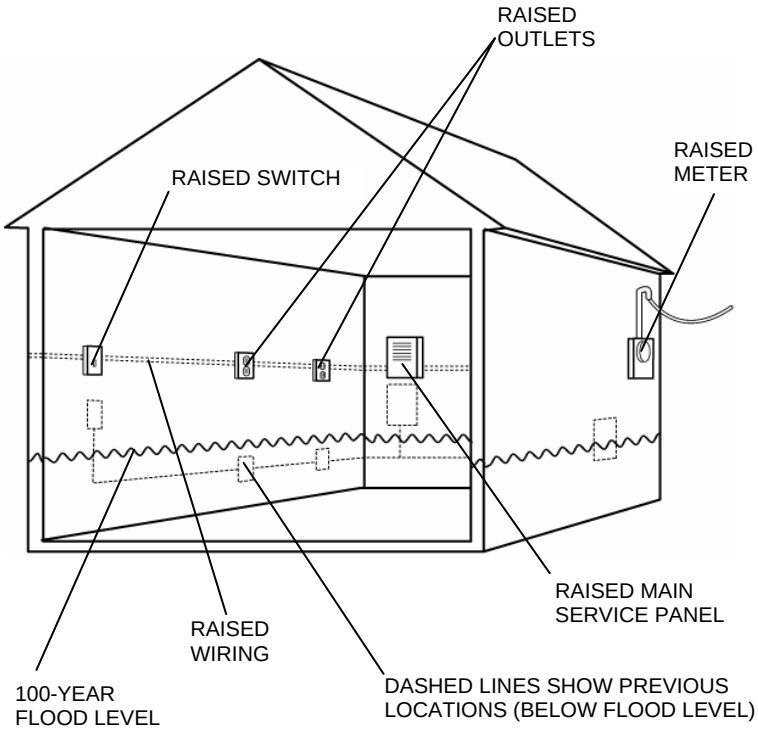

Raise Electrical System Components

TIPS

Keep these points in mind when you have your electrical system components raised:

- ✓ Electrical system modifications must be done by a licensed contractor, who will ensure that the work is done correctly and according to all applicable codes. This is important for your safety.
- ✓ Your contractor should check with the local power company about the maximum height that the electric meter can be raised.
- ✓ If your house is equipped with an old-style fuse box or low-amperage service, you may want to consider upgrading to a modern circuit breaker system and higher-amperage service, especially if you have large appliances or other electrical equipment that draws a lot of power.

ESTIMATED COST

Raising the electrical service panel, meter, and all of the outlets, switches, and wiring in a 1,000-square-foot, single-floor house will cost about $1,500 to $2,000. If this work is performed during the repair of a damaged house or construction of a new house, the cost may be much lower.

OTHER SOURCES OF INFORMATION

Protecting Your Home from Flooding, FEMA, 1994

Repairing Your Flooded Home, FEMA-234, 1992

Flood Emergency and Residential Repair Handbook, FIA-13, 1986

Retrofitting Flood-Prone Residential Structures, FEMA-114, 1986

To obtain copies of these and other FEMA documents, call FEMA Publications at 1-800-480-2520. Information is also available on the World Wide Web at **http//:www.fema.gov.**

Protecting Your Property From Flooding

Are You at Risk?

If you aren't sure whether your house is at risk from flooding, check with your local floodplain manager, building official, city engineer, or planning and zoning administrator. They can tell you whether you are in a flood hazard area. Also, they usually can tell you how to protect yourself and your house and property from flooding.

What You Can Do

Flood protection can involve a variety of changes to your house and property – changes that can vary in complexity and cost. You may be able to make some types of changes yourself; however, complicated or large-scale changes and those that affect the structure of your house or its electrical wiring and plumbing should be carried out only by a professional contractor licensed to work in your state, county, or city. One example of flood protection is anchoring fuel tanks. This is something that skilled homeowners can probably do on their own.

Anchor Fuel Tanks

Unanchored fuel tanks can be easily moved by flood waters. These tanks pose serious threats not only to you, your family, and your house, but also to public safety and the environment. An unanchored tank outside your house can be driven into your walls by flood waters, and it can be swept downstream, where it can damage other houses. When an unanchored tank in your basement is moved by flood waters, the supply line can tear free and your basement can be contaminated by oil. Even a buried tank can be pushed to the surface by the buoyant effect of soil saturated by water.

As shown in the figure, one way to anchor a tank is to attach it to a large concrete slab whose weight is great enough to resist the force of flood waters. This method can be used for all tanks, both inside and outside your house. You can also anchor an outside tank by running straps over it and attaching them to ground anchors.

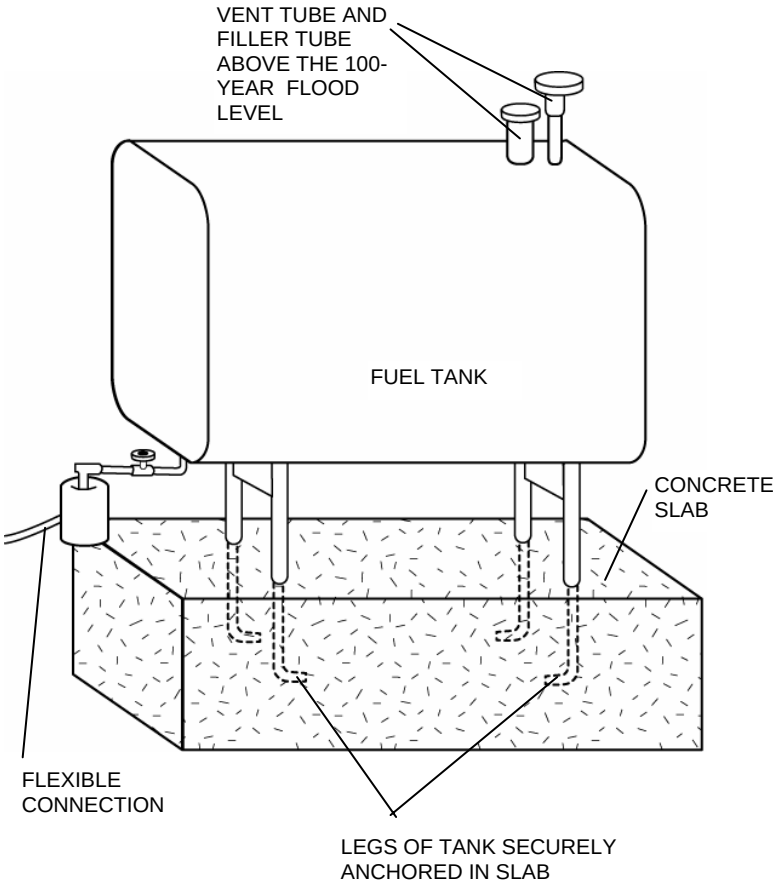

Anchor Fuel Tanks

TIPS

Keep these points in mind when you anchor a fuel tank:

- ✓ If you prefer not to do this work yourself, you can have a handyman or contractor anchor your tank.
- ✓ Extend all filling and ventilation tubes above the 100-year flood level so that flood waters cannot enter the tank.
- ✓ Close all connections when flood warnings are issued.

ESTIMATED COST

Anchoring a 1,000-gallon fuel tank to a concrete base will cost you about $300 to $500. Using straps and ground anchors will cost about $300.

OTHER SOURCES OF INFORMATION

Protecting Your Home from Flooding, FEMA, 1994

Repairing Your Flooded Home, FEMA-234, 1992

Flood Emergency and Residential Repair Handbook, FIA-13, 1986

Retrofitting Flood-Prone Residential Structures, FEMA-114, 1986

To obtain copies of these and other FEMA documents, call FEMA Publications at 1-800-480-2520. Information is also available on the World Wide Web at **http//:www.fema.gov.**

Protecting Your Property From Flooding

Are You at Risk?

If you aren't sure whether your house is at risk from flooding, check with your local floodplain manager, building official, city engineer, or planning and zoning administrator. They can tell you whether you are in a flood hazard area. Also, they usually can tell you how to protect yourself and your house and property from flooding.

What You Can Do

Flood protection can involve a variety of changes to your house and property – changes that can vary in complexity and cost. You may be able to make some types of changes yourself; however, complicated or large-scale changes and those that affect the structure of your house or its electrical wiring and plumbing should be carried out only by a professional contractor licensed to work in your state, county, or city. One example of flood protection is raising the heating, ventilating, and cooling equipment in your house so that it is above the flood level, or surrounding it with a flood wall. These are things that only a licensed contractor should do.

Raise or Floodproof HVAC Equipment

Heating, ventilating, and cooling (HVAC) equipment, such as a furnace or hot water heater, can be damaged extensively if it is inundated by flood waters. The amount of damage will depend partly on the depth of flooding and the amount of time the equipment remains under water. Often, the damage is so great that the only solution is replacement.

In floodprone houses, a good way to protect HVAC equipment is to move it from the basement or lower level of the house to an upper floor or even to the attic. A less desirable method is to leave the equipment where it is and build a concrete or masonry block floodwall around it. Both of these methods require the skills of a professional contractor. Relocation can involve plumbing and electrical changes, and floodwalls must be adequately designed and constructed so that they are strong enough and high enough to provide the necessary level of protection.

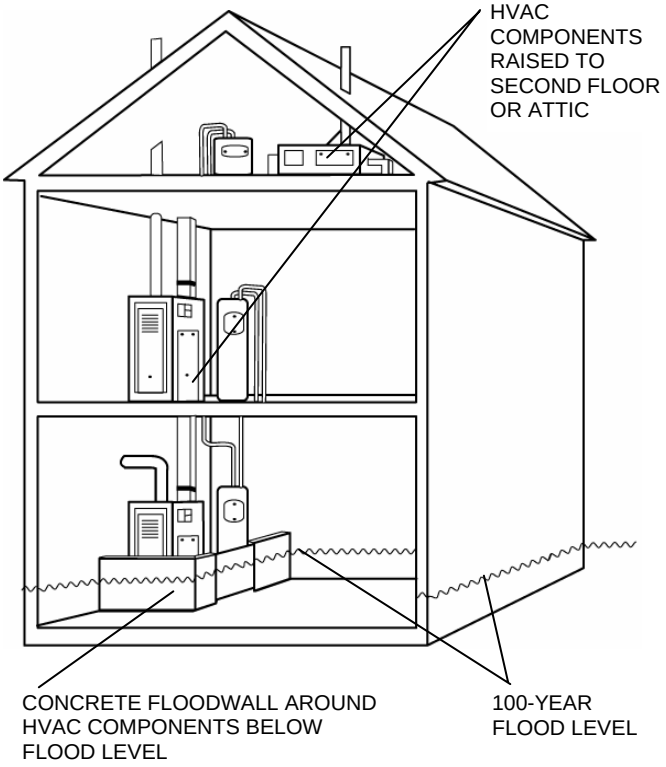

Raise or Floodproof HVAC Equipment

TIPS

Keep these points in mind when you have your HVAC equipment raised or floodproofed:

- ✓ Changes to the plumbing, electrical system, and ventilating ductwork in your house must be done by a licensed contractor, who will ensure that the work is done correctly and according to all applicable codes. This is important for your safety.
- ✓ If you are having your existing furnace or hot water heater repaired or replaced, consider having it relocated at the same time. It will probably be cheaper to combine these projects than to carry them out at different times.
- ✓ Similarly, if you have decided to raise your HVAC equipment, consider upgrading to a more energy-efficient unit at the same time. Upgrading can not only save you money on your heating and cooling bills, it may also make you eligible for a rebate from your utility companies.
- ✓ If you decide to protect your HVAC equipment with a floodwall, remember that you will need enough space in the enclosed area for system repairs and routine maintenance. Also, depending on its height, the wall may have to be equipped with an opening that provides access to the enclosed area. Any opening will have to be equipped with a gate that can be closed to prevent flood waters from entering.

ESTIMATED COST

Having your furnace and hot water heater moved to a higher floor or to the attic will cost about $ 1,500. The cost of a floodwall will depend partly on its height and length. A 3-foot-high wall with a perimeter length of 35 feet would cost about $1,000.

OTHER SOURCES OF INFORMATION

Protecting Your Home from Flooding, FEMA, 1994

Repairing Your Flooded Home, FEMA-234, 1992

Flood Emergency and Residential Repair Handbook, FIA-13, 1986

Retrofitting Flood-Prone Residential Structures, FEMA-114, 1986

To obtain copies of these and other FEMA documents, call FEMA Publications at 1-800-480-2520. Information is also available on the World Wide Web at **http//:www.fema.gov.**

Protecting Your Property From Flooding

ARE YOU AT RISK?

If you aren't sure whether your house is at risk from flooding, check with your local floodplain manager, building official, city engineer, or planning and zoning administrator. They can tell you whether you are in a flood hazard area. Also, they usually can tell you how to protect yourself and your house and property from flooding.

WHAT YOU CAN DO

Flood protection can involve a variety of changes to your house and property – changes that can vary in complexity and cost. You may be able to make some types of changes yourself; however, complicated or large-scale changes and those that affect the structure of your house or its electrical wiring and plumbing should be carried out only by a professional contractor licensed to work in your state, county, or city. One example of flood protection is installing a backflow valve to prevent sewage from backing up into your house. This is something that only a licensed plumber or contractor should do.

INSTALL SEWER BACKFLOW VALVES

In some floodprone areas, flooding can cause sewage from sanitary sewer lines to back up into houses through drain pipes. These backups not only cause damage that is difficult to repair, but also create health hazards.

A good way to protect your house from sewage backups is to install backflow valves, which are designed to block drain pipes temporarily and prevent flow into the house. Backflow valves are available in a variety of designs that range from the simple to the complex. The figure shows a gate valve, one of the more complex designs. It provides a strong seal, but must be operated by hand. So the effectiveness of a gate valve will depend on how much warning you have of impending flooding. Among the simpler valves are a flap or check valves, which open to allow flow out of the house but close when the flow reverses. These valves operate automatically but do not provide as strong a seal as a gate valve.

TYPICAL INSTALLATION OF AN EXTERIOR BACKFLOW VALVE

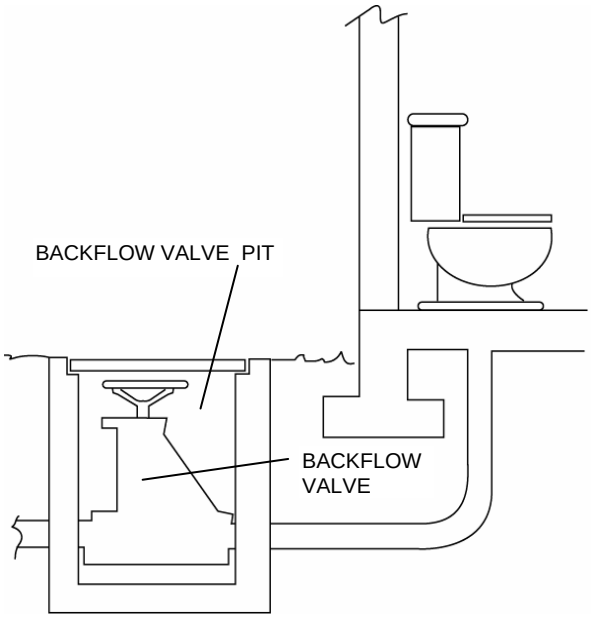

← NORMAL DIRECTION OF FLOW (VALVE PREVENTS FLOW IN REVERSE DIRECTION)

Install Sewer Backflow Valves

TIPS

Keep these points in mind if you have backflow valves installed:

- ✓ Changes to the plumbing in your house must be done by a licensed plumber or contractor, who will ensure that the work is done correctly and according to all applicable codes. This is important for your safety.
- ✓ Some valves incorporate the advantages of both flap and gate valves into a single design. Your plumber or contractor can advise you on the relative advantages and disadvantages of the various types of backflow valves.
- ✓ Valves should be installed on all pipes that leave the house or that are connected to equipment that is below the potential flood level. So valves may be needed on washing machine drain lines, laundry sinks, fuel oil lines, rain downspouts, and sump pumps, as well as sewer/septic connections.
- ✓ If you have a sump pump, it may be connected to underground drain lines, which may be difficult to seal off.

ESTIMATED COST

Having a plumber or contractor install one backflow valve will cost you about $525 for a combined gate/flap valve or about $375 for a flap valve. These figures include the cost of excavation and backfilling.

OTHER SOURCES OF INFORMATION

Protecting Your Home from Flooding, FEMA, 1994

Repairing Your Flooded Home, FEMA-234, 1992

Flood Emergency and Residential Repair Handbook, FIA-13, 1986

Retrofitting Flood-Prone Residential Structures, FEMA-114, 1986

To obtain copies of these and other FEMA documents, call FEMA Publications at 1-800-480-2520. Information is also available on the World Wide Web at **http//:www.fema.gov.**

FEMA Protecting Your Business From Flooding

ARE YOU AT RISK?

If you aren't sure whether your business is at risk from flooding, check with your local floodplain manager, building official, city engineer, or planning and zoning administrator. They can tell you whether you are in a flood hazard area, and they also can tell you how to protect your business from flooding.

WHAT YOU CAN DO

Protecting your business from flooding can involve a variety of actions, from inspecting and maintaining your buildings to installing protective devices. Most of these actions, especially those that affect the structure of your buildings or their utility systems, should be carried out by qualified maintenance staff or professional contractors licensed to work in your state, county, or city. One example of flood protection is using dry floodproofing techniques to protect buildings in flood hazard areas.

DRY FLOODPROOF YOUR BUILDING

One way to protect a building and its contents from flood damage is to seal the building so that flood waters cannot enter. This method, referred to as "dry floodproofing," encompasses a variety of measures (some of which are covered by separate fact sheets – see back of this sheet):

- applying a waterproof coating or membrane to the exterior walls of the building
- installing watertight shields over doors, windows, and other openings
- anchoring the building as necessary so that it can resist floatation
- installing backflow valves in sanitary and storm sewer lines
- raising utility system components, machinery, and other pieces of equipment so that they are above the flood level
- anchoring fuel tanks and other storage tanks to prevent flotation
- installing a sump pump and foundation drain system
- strengthening walls so that they can withstand the pressures of flood waters and the impacts of floodborne debris

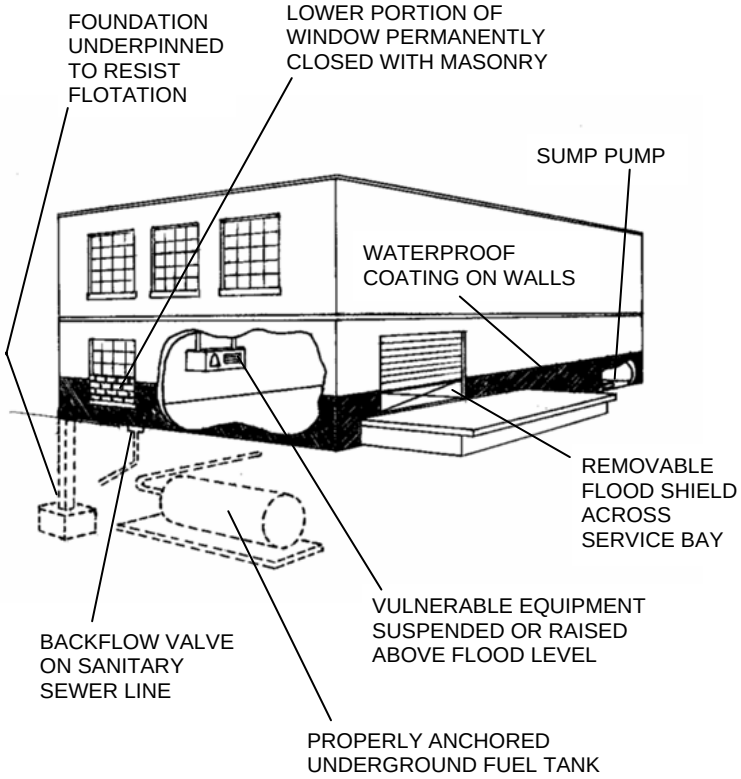

Dry Floodproof Your Building

TIPS

Keep these points in mind when you dry floodproof a building:

- ✓ Dry floodproofing is appropriate primarily for slab-on-grade buildings with concrete or solid masonry walls. Concrete and masonry are easier to seal, more resistant to flood damage, and stronger than other conventional construction materials.

- ✓ If you dry floodproof a “substantially damaged” or “substantially improved” building (as defined by the National Flood Insurance Program regulations) or a newly constructed building, and if the building’s lowest floor (including any basement) is below the Base Flood Elevation (BFE) shown on the Flood Insurance Rate Map (FIRM) for your community, your dry floodproofing must be certified as providing protection from the BFE. To obtain this certification, you must floodproof your building to a height at least 1 foot above the BFE. Check with your local floodplain manager or building official for more information.

- ✓ The height of your dry floodproofing should not exceed 3 feet. The pressures exerted by deeper water can cause walls to buckle or collapse. Before you use dry floodproofing to protect against greater flood depths, have a structural engineer evaluate the strength of your walls.

- ✓ If your dry floodproofing measures require human intervention, such as placing shields over doors and windows before flood waters arrive, you should have an operations and maintenance plan that describes all the actions that must be taken and lists the persons who are responsible. It must also include a schedule of periodic maintenance that states how often the dry floodproofing measures will be inspected and who will perform the inspections.

ESTIMATED COST

The cost of individual dry floodproofing measures will vary with the size, condition, and use of your building; the dry floodproofing height; and the extent to which you use contractors and engineers.

OTHER SOURCES OF INFORMATION

Install Sewer Backflow Valves, Protecting Your Property from Flooding, FEMA Hazard Mitigation Fact Sheet, 1998

Anchor Fuel Tanks, Protecting Your Property from Flooding, FEMA Hazard Mitigation Fact Sheet, 1998

Non-Residential Floodproofing – Requirements and Certification for Buildings Located in Special Flood Hazard Areas, FEMA Technical Bulletin 3-93, April 1993

Floodproofing Non-Residential Structures, FEMA 102, 1986

To obtain copies of FEMA documents, call FEMA Publications at 1-800-480-2520. Information is also available on the World Wide Web at **http//:www.fema.gov.**

FEMA Protecting Your Business From Flooding

ARE YOU AT RISK?

If you aren't sure whether your business is at risk from flooding, check with your local floodplain manager, building official, city engineer, or planning and zoning administrator. They can tell you whether you are in a flood hazard area, and they also can tell you how to protect your business from flooding.

WHAT YOU CAN DO

Protecting your business from flooding can involve a variety of actions, from inspecting and maintaining your buildings to installing protective devices. Most of these actions, especially those that affect the structure of your buildings or their utility systems, should be carried out by qualified maintenance staff or professional contractors licensed to work in your state, county, or city. One example of flood protection is using flood-resistant construction materials.

BUILD WITH FLOOD-RESISTANT MATERIALS

If your business is in a flood hazard area, you can reduce the damage caused by flood waters and make cleanup easier by using flood-resistant building materials. Building materials are considered flood-resistant if they can withstand direct contact with flood waters for at least 72 hours without being significantly damaged. "Significant damage" means any damage that requires more than low-cost, cosmetic repair (such as painting). As shown in the figure, flood-resistant materials should be used for walls, floors, and other parts of a building that are below the flood level. Both FEMA and the U.S. Army Corps of Engineers have published lists of these materials (see OTHER SOURCES OF INFORMATION on the back of this sheet). Commonly available flood-resistant materials include the following:

Flooring Materials
- concrete and concrete tile
- ceramic, clay, terrazzo, vinyl, and rubber tile
- pressure-treated (PT) and naturally decay-resistant lumber

Wall and Ceiling Materials
- brick, concrete, concrete block, glass block, stone, and ceramic and clay tile
- cement board
- polyester epoxy paint
- PT and naturally decay-resistant lumber
- pressure-treated and marine grade plywood
- closed-cell and foam insulation

Other
- metal doors and cabinets

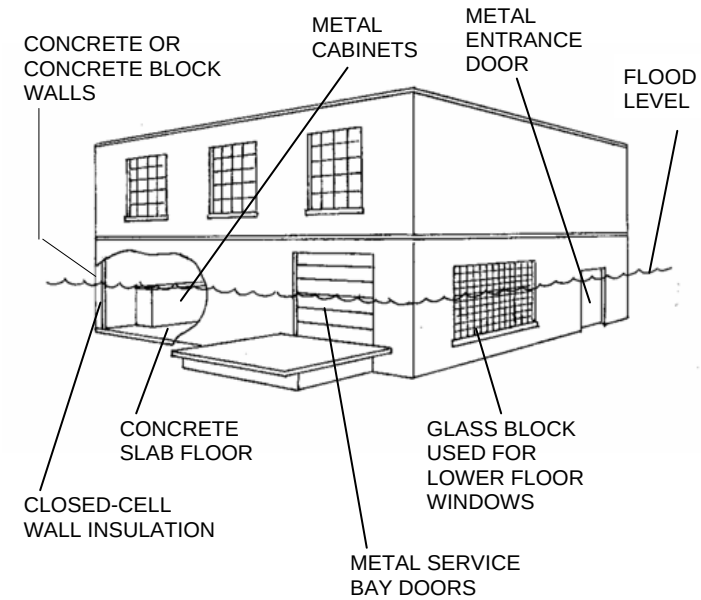

Build with Flood-Resistant Materials

TIPS

Keep these points in mind when you build with flood-resistant materials:

- ✓ Remember that as long as your buildings remain exposed to flooding, they are likely to be damaged, even when you use flood-resistant materials. Some amount of cleanup and cosmetic repair will usually be necessary. Also, although using flood-resistant materials can reduce the amount and severity of water damage, it does not protect your buildings from other flood hazards, such as the impact of floodborne debris.
- ✓ All hardware used in areas below the flood level should be made of stainless or galvanized steel.
- ✓ Flood insurance will not pay a claim for damaged finishing materials below the Base Flood Elevation (BFE), even if those materials are considered flood-resistant.
- ✓ If your business is in a coastal flood hazard area, installing flood-resistant materials in areas below the BFE may create an obstruction, in violation of National Flood Insurance Program regulations. Check with your local building official or floodplain manager before making any modifications to your buildings.
- ✓ Areas of a building that are below the BFE should be used only for parking, storage, and access.

ESTIMATED COST

The cost of using flood-resistant materials will vary, depending on the size of the project you undertake. Your local building official and contractors can give you cost estimates for materials and installation.

OTHER SOURCES OF INFORMATION

Flood-Resistant Materials Requirements for Buildings Located in Special Flood Hazard Areas, FEMA Technical Bulletin 2-93, April 1993

Floodproofing Regulations, EP 1165-2-314, U.S. Army Corps of Engineers, December 15, 1995

Floodproofing Non-Residential Structures, FEMA 213, 1986

To obtain copies of FEMA documents, call FEMA Publications at 1-800-480-2520. Information is also available on the World Wide Web at **http//:www.fema.gov.**

Protecting Your Business From Flooding

Are You at Risk?

If you aren't sure whether your business is at risk from flooding, check with your local floodplain manager, building official, city engineer, or planning and zoning administrator. They can tell you whether you are in a flood hazard area, and they also can tell you how to protect your business from flooding.

What You Can Do

Protecting your business from flooding can involve a variety of actions, from inspecting and maintaining your buildings to installing protective devices. Most of these actions, especially those that affect the structure of your buildings or their utility systems, should be carried out by qualified maintenance staff or professional contractors licensed to work in your state, county, or city. For a business that obtains its water from a private well, one example of flood protection is making improvements to the well to prevent contamination by flood water.

Protect Wells From Contamination by Flooding

Flood waters often carry hazardous and toxic materials, including raw sewage, animal wastes, oil, gasoline, solvents, and chemicals such as pesticides and fertilizer. Flood water that enters a well can contaminate the groundwater and make the well water unsafe to drink or to use in your business. The effects may last long after the flood waters have receded.

Proper well construction will help protect your well against contamination. A licensed well-drilling contractor can inspect your well and suggest improvements, such as the following (see figure):

- extending the well casing at least 2 feet above the highest known flood elevation
- installing a sanitary seal or cover on the casing
- curbing the casing at ground level by surrounding it with a watertight seal that is at least 4 inches thick and that extends at least 2 feet in all directions
- placing grout between the casing and the sides of the bore hole to a depth of at least 10 feet
- installing a backflow valve in the water line
- protecting electrical controls from flood water
- drilling a new well on higher ground, above expected flood levels and known sources of pollution

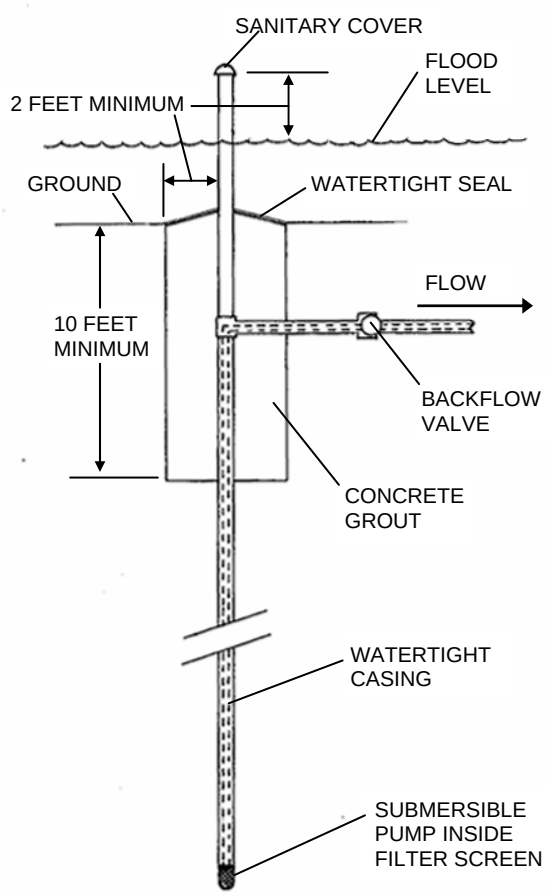

Protect Wells from Contamination by Flooding

TIPS

Keep these points in mind when you improve your well to protect it from flooding:

- ✓ Many state and local agencies regulate the construction and modification of wells. Check with your local health department or building officials for more information.
- ✓ Power outages often occur during floods, so you should consider providing a backup power supply to ensure the continued operation of your well. (For more information, see the separate fact sheet *Install a Generator for Emergency Power*.)
- ✓ The vulnerability of a well to contamination by flood waters depends partly on the well's age and depth. Wells over 50 years old and less than 50 feet deep are more likely to be contaminated by flood waters.
- ✓ Do not store potential contaminants within 100 feet of the well. Potential contaminants include fuels, solvents, and dry and liquid chemicals.
- ✓ Have your water tested annually for the most common contaminants, including coliform bacteria.

ESTIMATED COST

The cost of most improvements to an existing well will vary, depending on the condition of the well. Having a plumber or contractor install a backflow valve in the water line will cost about $500. This figure includes the cost of excavation and backfilling. Because geological conditions and groundwater yields vary from site to site, you should contact a local licensed well driller regarding the costs of other well improvements and new wells.

OTHER SOURCES OF INFORMATION

American Water Works Association Standards, AWWA A100-90, 1995

Wellhead Protection for Private Domestic Wells, A. Tyson, University of Georgia College of Agricultural & Environmental Sciences, 1993

Assessing the Condition of Your Water Well and Its Location, D. Weston, North Dakota State University, 1994

Ground Water Contamination from Drinking Water Well Condition, Dr. D, Hoffman, Texas A&M University, 1997

To obtain copies of FEMA documents, call FEMA Publications at 1-800-480-2520. Information is also available on the World Wide Web at **http//:www.fema.gov.**