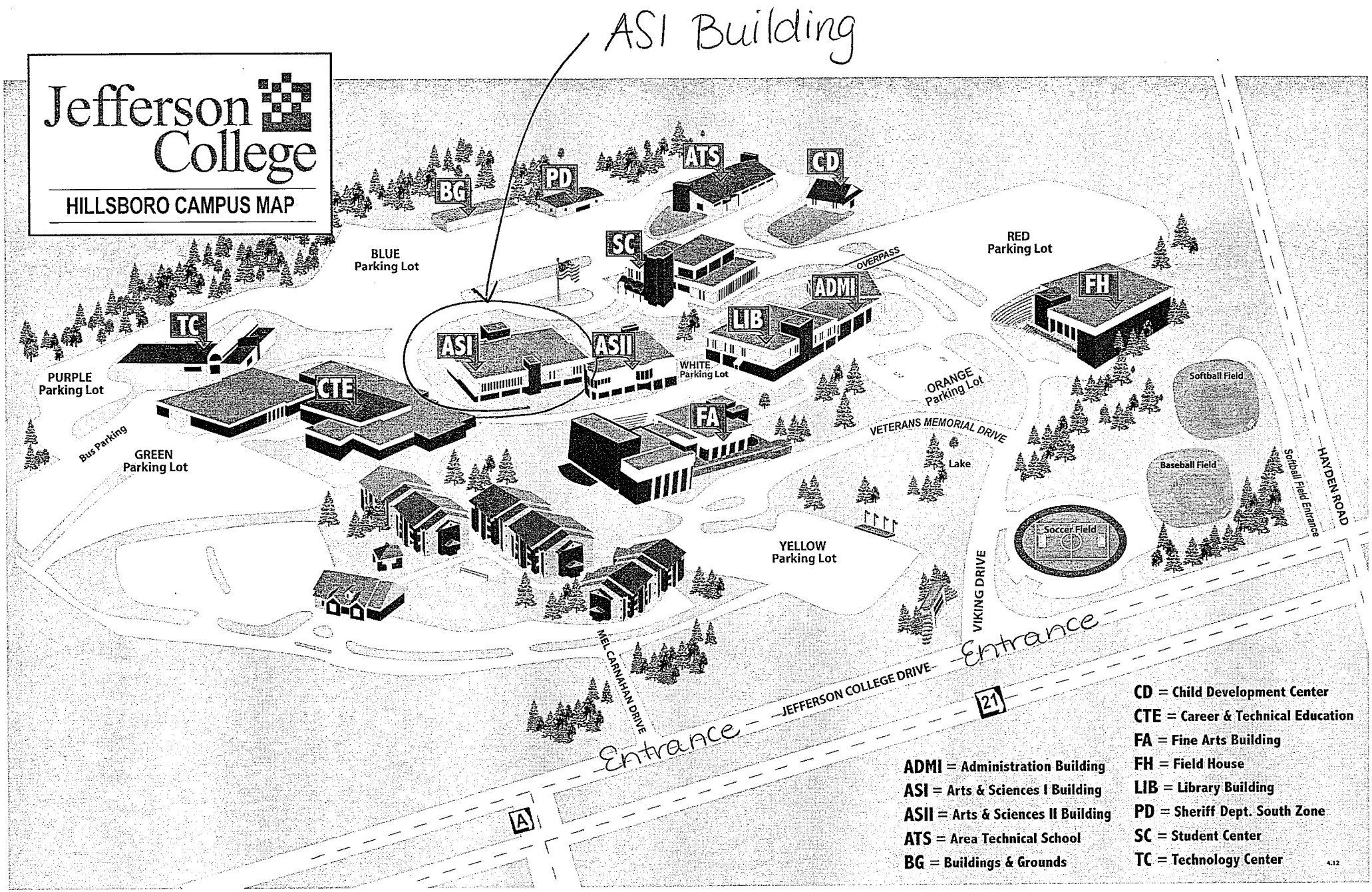
ASI Building
Jefferson College
HILLSBORO CAMPUS MAP
BG
PD
ATS
CD
SC
BLUE Parking Lot
RED Parking Lot
OVERPASS
ADMI
FH
LIB
TC
ASI
ASII
WHITE Parking Lot
PURPLE Parking Lot
CTE
ORANGE Parking Lot
Softball Field
FA
VETERANS MEMORIAL DRIVE
Lake
Bus Parking
GREEN Parking Lot
Baseball Field
Softball Field Entrance
HAYDEN ROAD
Soccer Field
YELLOW Parking Lot
VIKING DRIVE
MEL CARNAHAN DRIVE
JEFFERSON COLLEGE DRIVE
Entrance
Entrance
21
A
ADMI = Administration Building
ASI = Arts & Sciences I Building
ASII = Arts & Sciences II Building
ATS = Area Technical School
BG = Buildings & Grounds
CD = Child Development Center
CTE = Career & Technical Education
FA = Fine Arts Building
FH = Field House
LIB = Library Building
PD = Sheriff Dept. South Zone
SC = Student Center
TC = Technology Center
4.12

Arts & Sciences I (ASI)

Storm Safe Areas Shaded

● = Fire Extinguisher

Designated Smoking area Here

First Floor

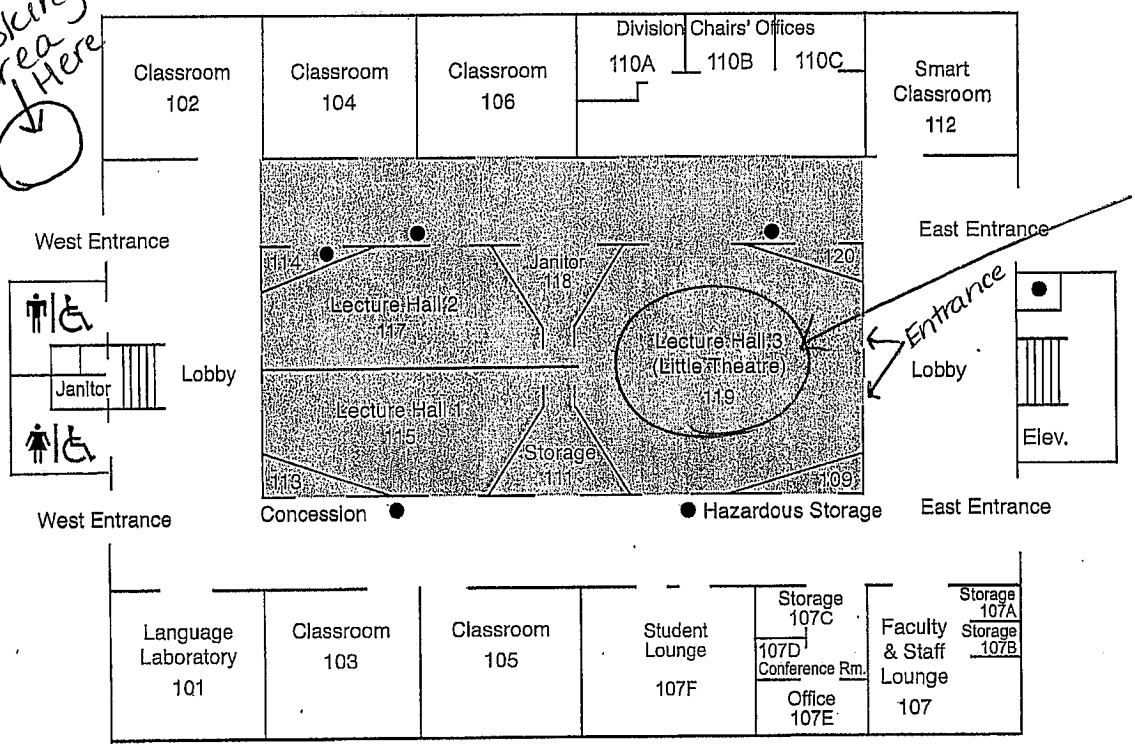
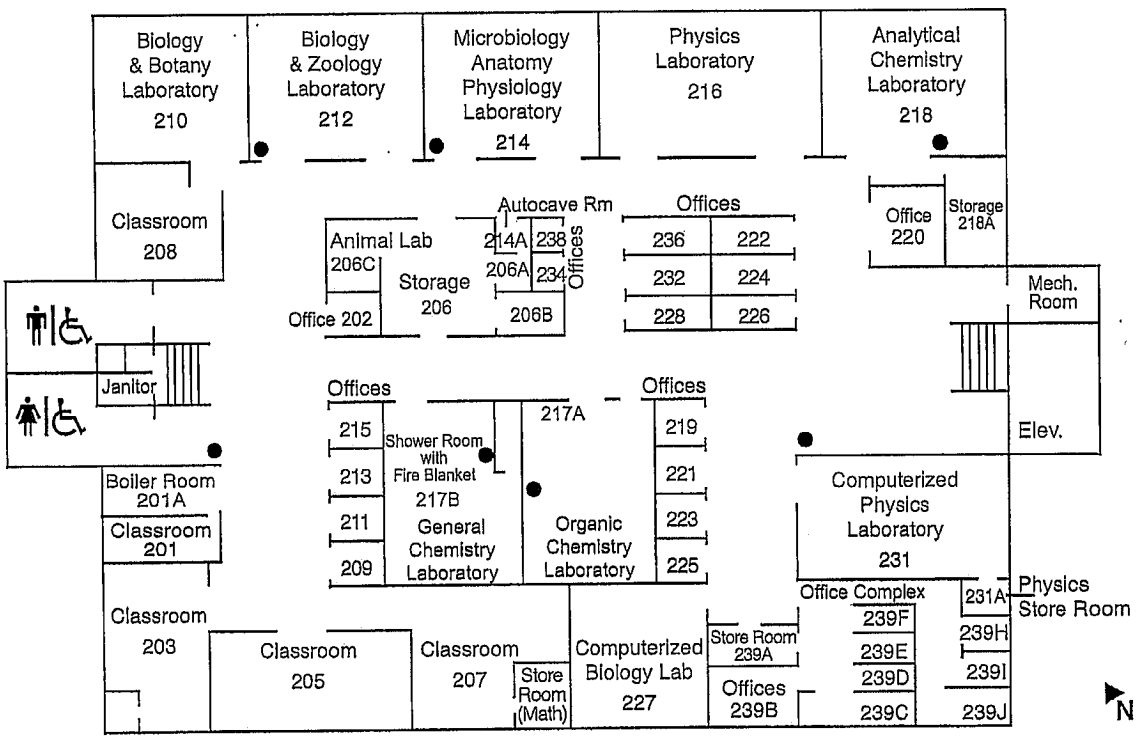
Second Floor